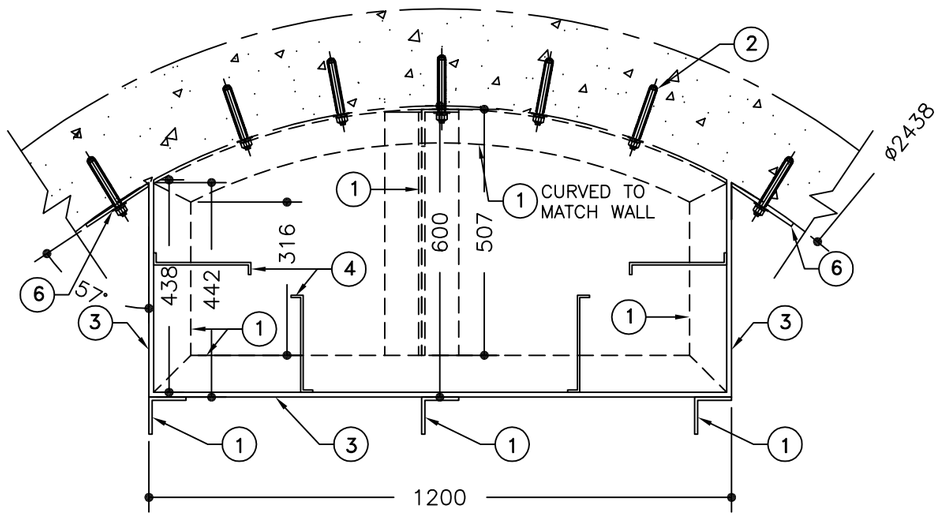

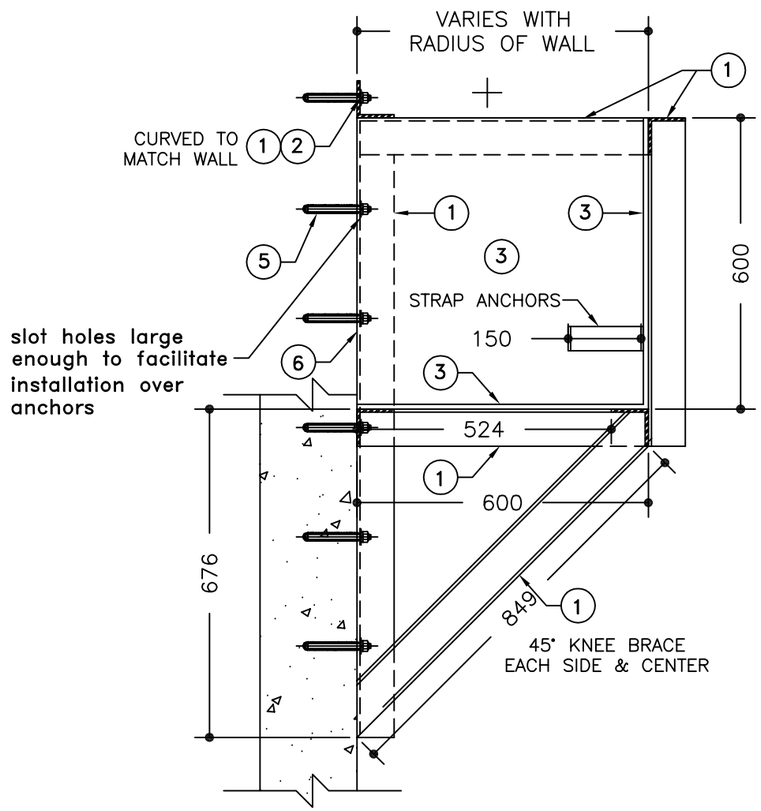

MSU
MISSISSAUGA LTD.
PHONE: (905) 823-4340
WATTS: (800) 268-5336
WEBSITE: www.msumississauga.com

#	QTY.	MATERIAL	DESCRIPTION
1	16	ALUM. 6061-T6	L 76 X 76 X 6mm FRAMING FULLY WELDED CONSTRUCTION
2	6	STAINLESS STEEL 316	M 12øX CHEMICAL ANCHORS C/W NUT FLAT AND LOCK WASHER
3	4	ALUM. 6061-T6	10mm THICK WELDED ALUM. PLATE
4	4	ALUM. 6061-T6	5 X 50 X 200L WELDED STRAP ANCHORS (BEND 25 X 150 X 25)
5	10	STAINLESS STEEL 316	M 20øX150 CHEMICAL ANCHORS C/W NUT FLAT AND LOCK WASHER
6	2	ALUM. 6061-T6	152 X 6mm FRAMING FLAT BAR FULLY WELDED TO ITEM #1

THIS DOCUMENT CONTAINS PROPRIETARY INFORMATION AND OTHER RIGHTS WHICH ARE THE SOLE AND EXCLUSIVE PROPERTY OF MSU MISSISSAUGA LTD.

POSESSION OF THIS MATERIAL DOES NOT CONVEY OR TRANSFER ANY RIGHTS THEREIN, AND REPRODUCTION, USE, COPYING OR DISCLOSURE TO OTHERS IS FORBIDDEN WITHOUT THE PRIOR WRITTEN CONSENT OF AN OFFICER OF MSU MISSISSAUGA LTD.

© MSU MISSISSAUGA LTD. – JULY 23RD, 2014

NOTE:

1) WELDING SHALL CONFORM TO CSA W47.1 CSA W59
2) WELDED SURFACES REMAIN AS WELDED.

PROJECT	LOCATION PROJECT
CONTRACTOR	CONTRACTOR
ARCH'T/ENG'R	ENGINEER
QTY. 1	PROJECT NO. #

TITLE: SPLITTER BOX C/W SPILL SUPPORT

REVISION NO.	DATE	BY	DATE #/#/#	DWG. BY: SCJ	DWG. NO. CATA
1			SCALE NTS	DWG. NO.	SPLITTER
2					